LookOurWay

INFLATABLE SOCCER GOALS

TOP

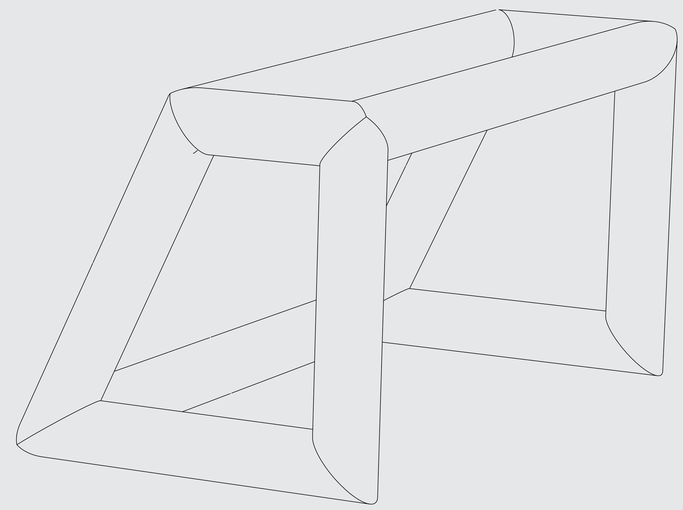

FRONT

SIDE (A)

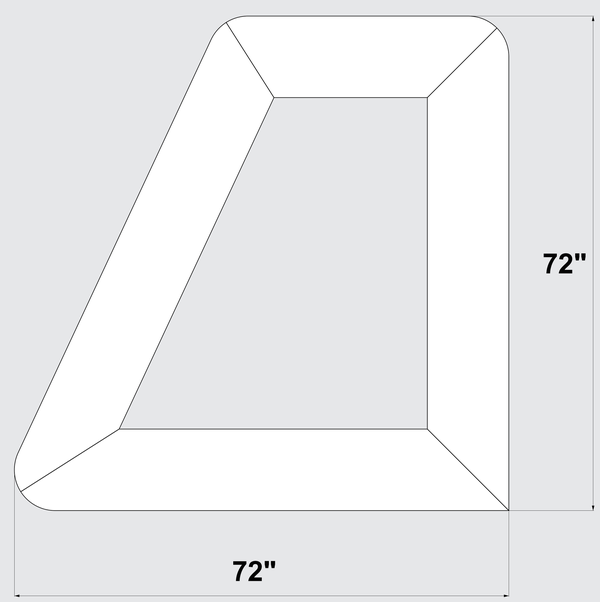

SIDE (B)

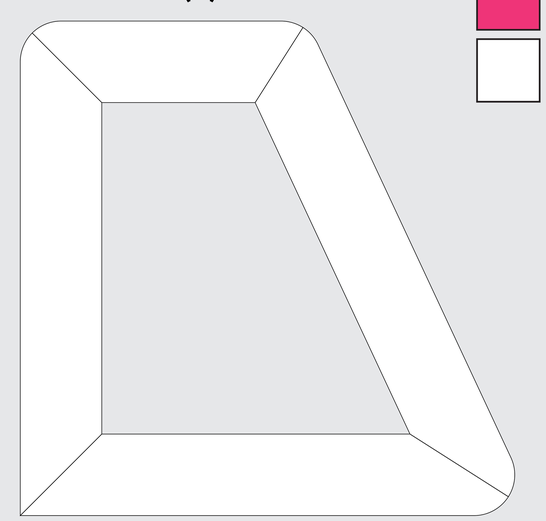

LookOurWay.com | 866-586-3888 | sales@lookourway.com