LookOurWay

40FT HELMET TUNNEL

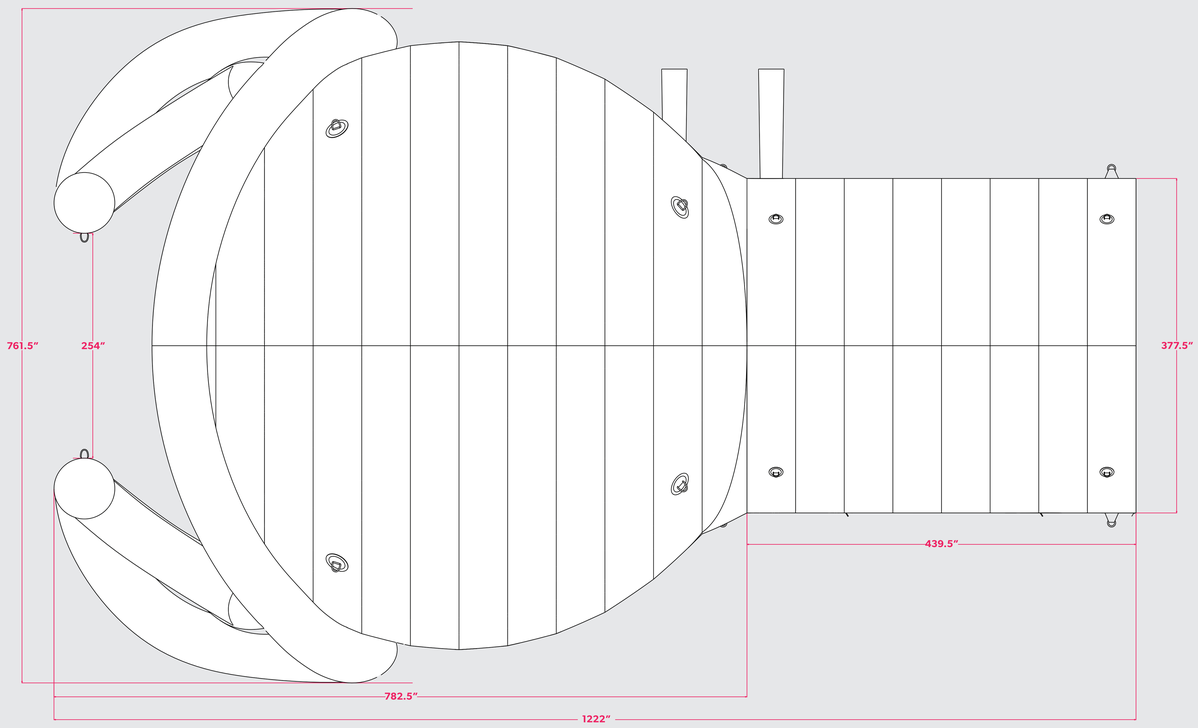

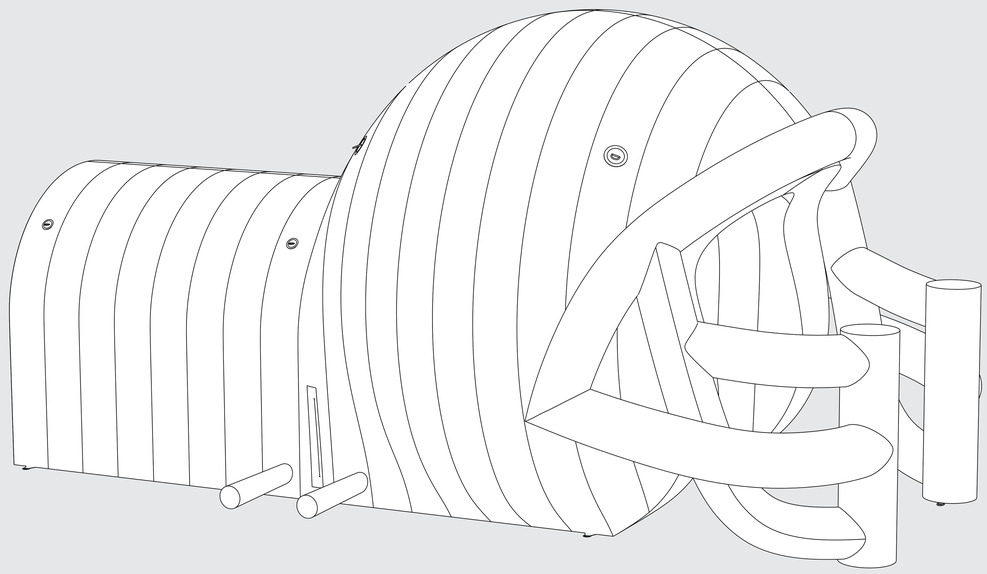

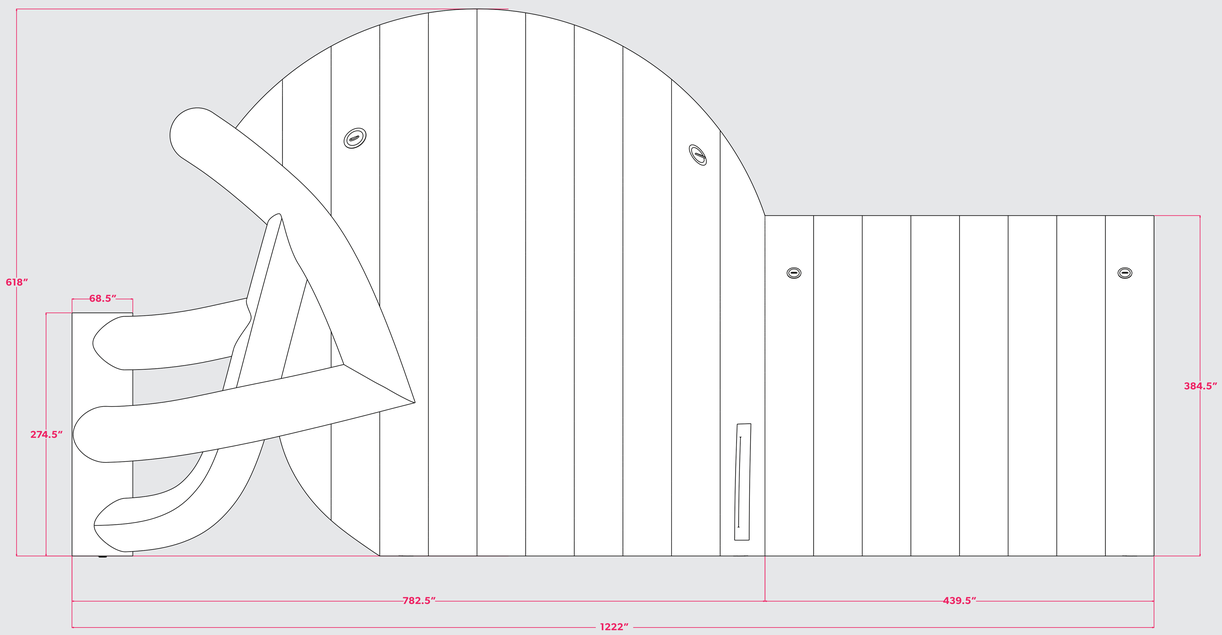

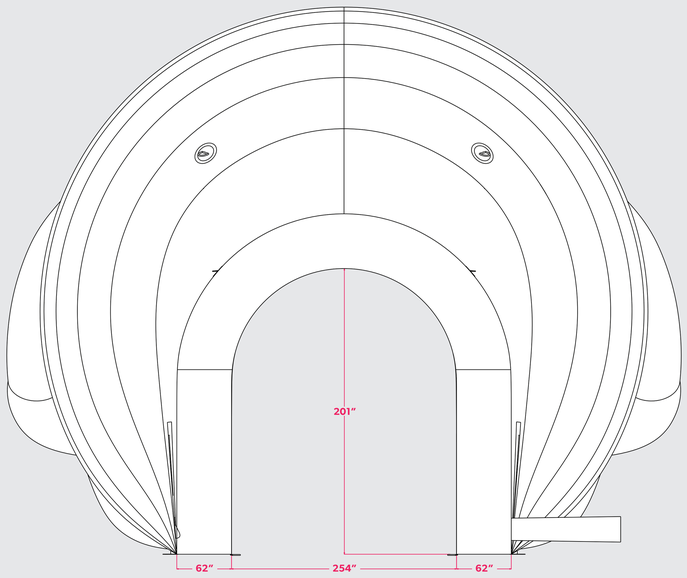

IMPORTANT

Please send artwork in CMYK color mode & note any PMS colors being used. This Template is designed at 10% scale of the final product. Please RASTERIZE artwork at a minimum of 300DPI to endure high quality print