LookOurWay

20FT - PRO-XL INFLATABLE BATTING CAGE

TOP

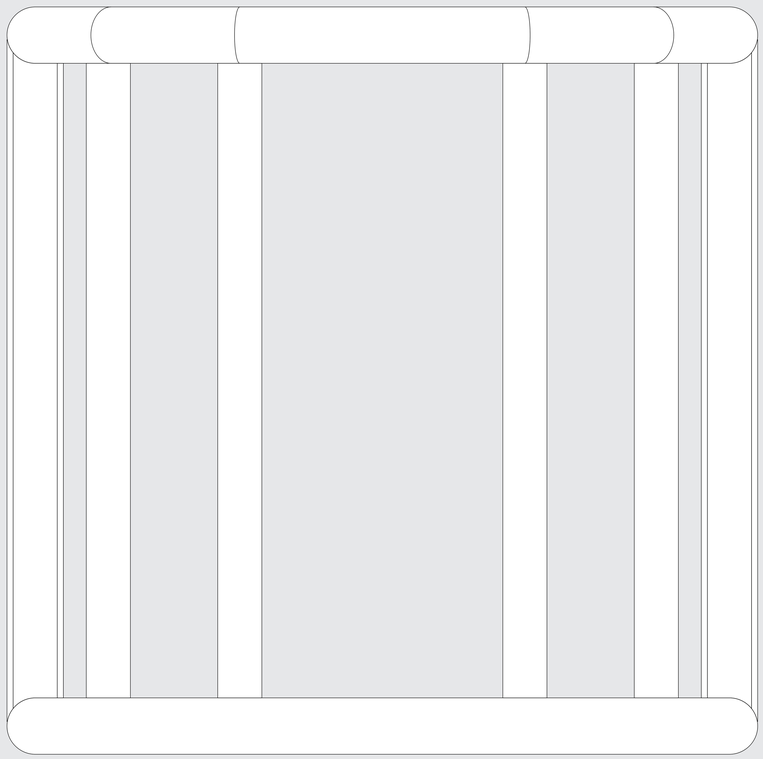

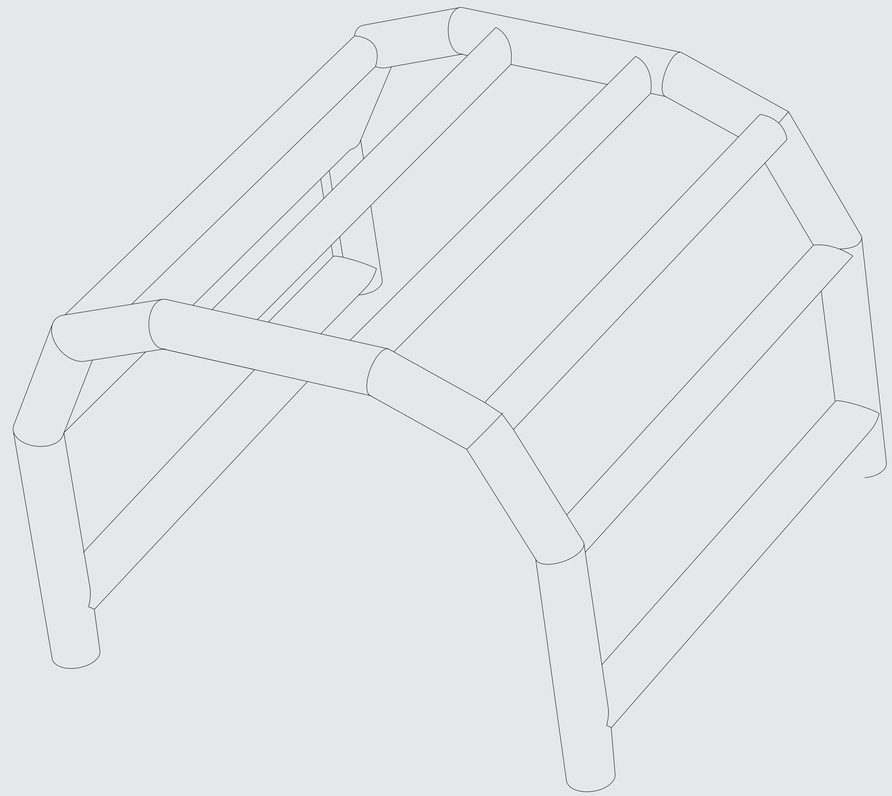

FRONT

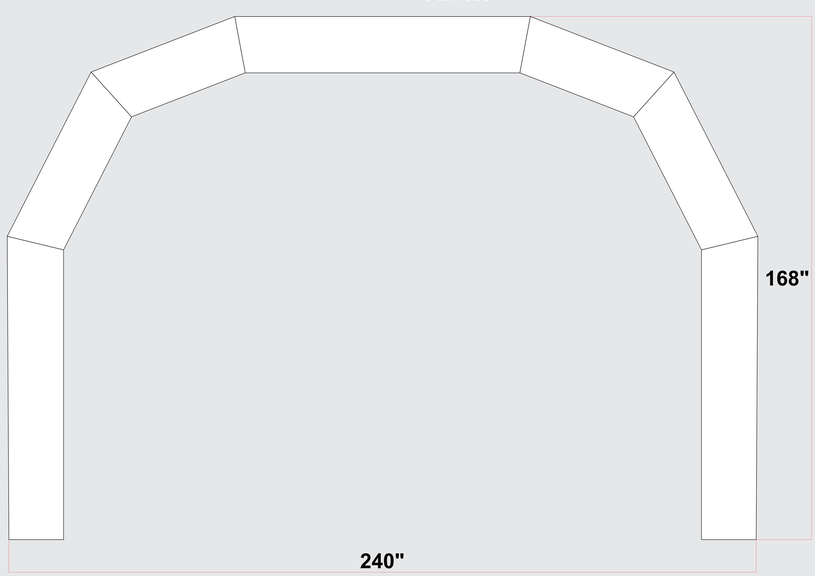

SIDE (A)

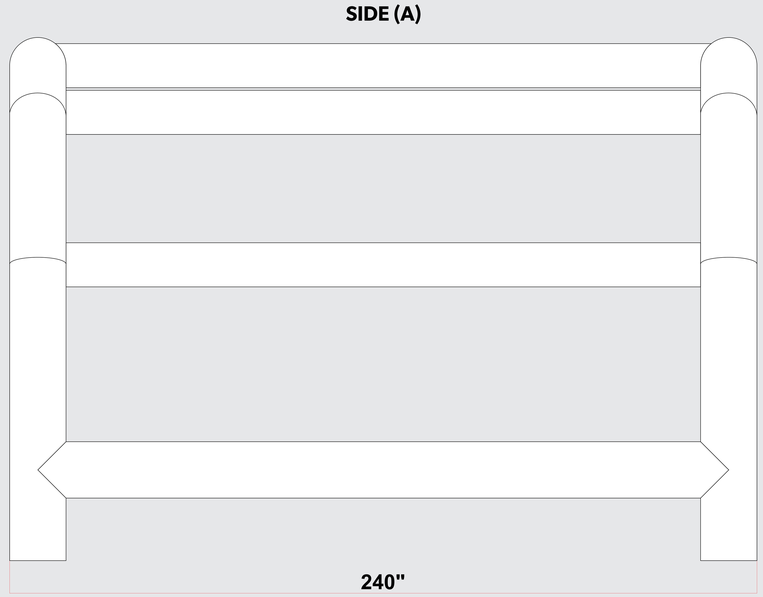

SIDE (B)