LookOurWay

15FT - SLIM INFLATABLE CAN W/ BASE

Note: Template is at 1:10 scale. Vector artwork is preferred

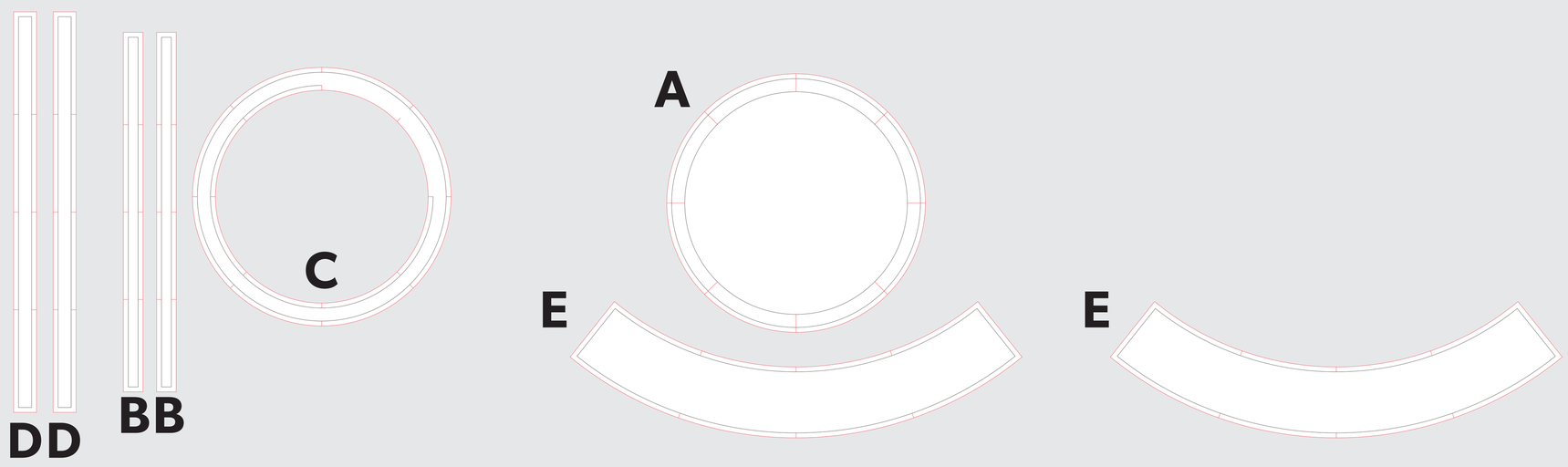

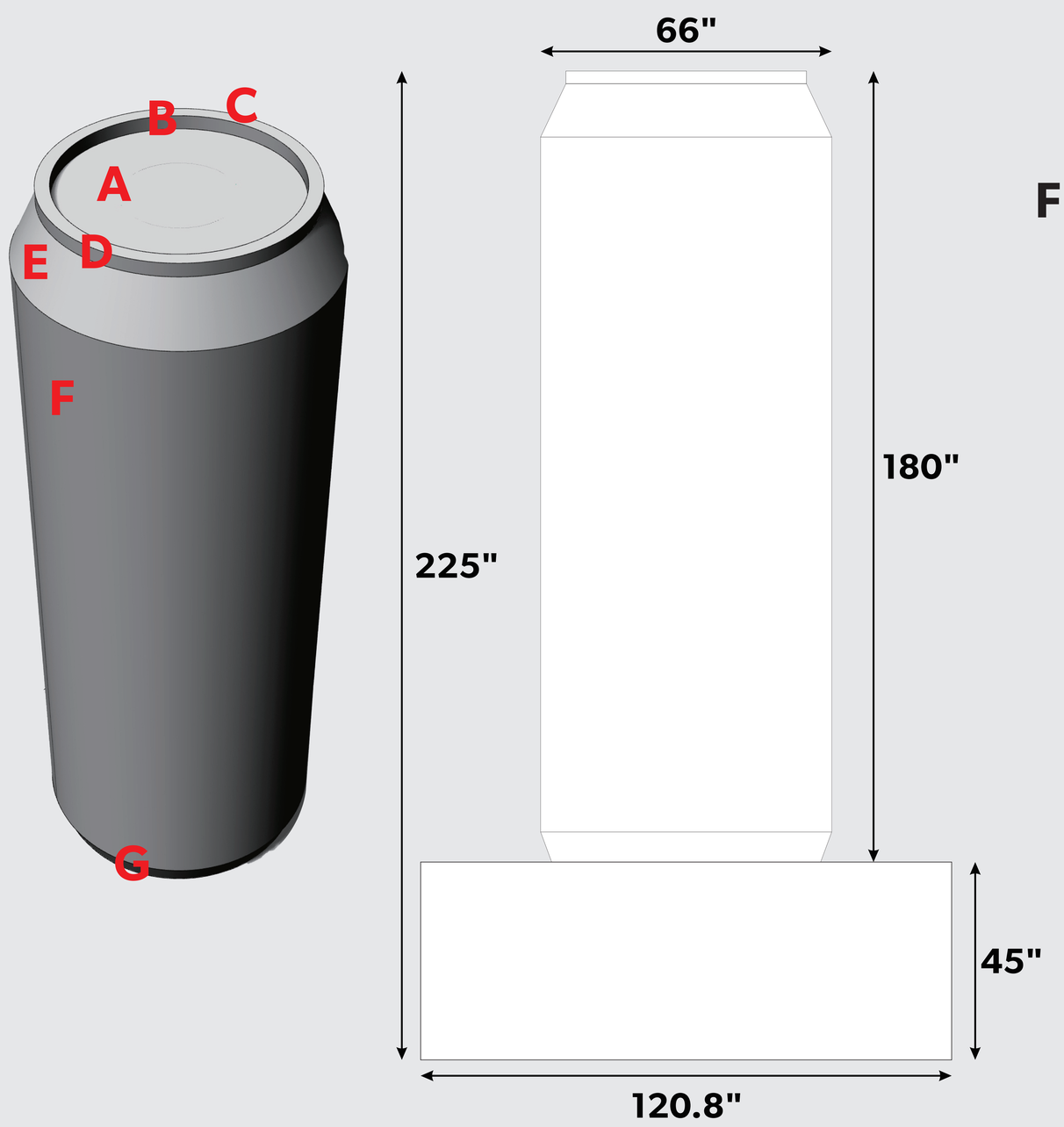

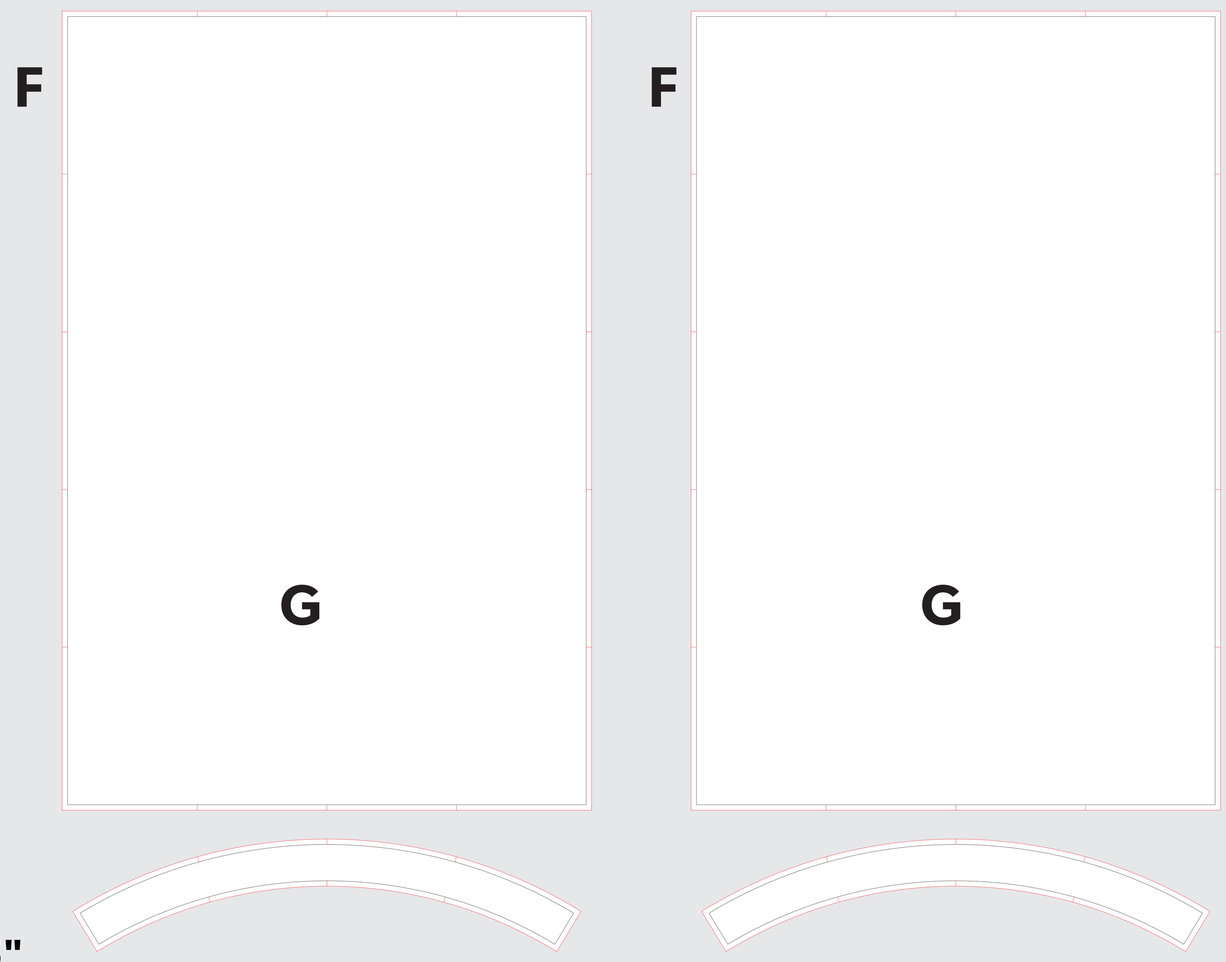

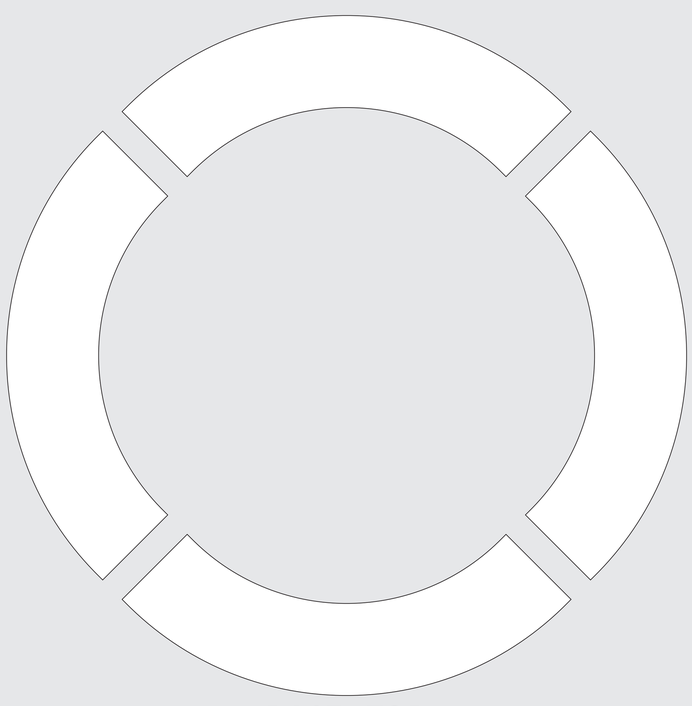

BASE - TOP

BASE - BOTTOM

BASE - FRONT

BASE - BACK

IMPORTANT

Please send artwork in CMYK color mode & note any PMS colors being used.
Please RASTERIZE artwork at a minimum of 150DPI to endure high quality print

LookOurWay.com | 866-586-3888 | sales@lookourway.com