LookOurWay

10ft Backlit “Premium Arch” SEG Trade Show Booth Display w/ Partition

Podium

Front (E) | Back (F)

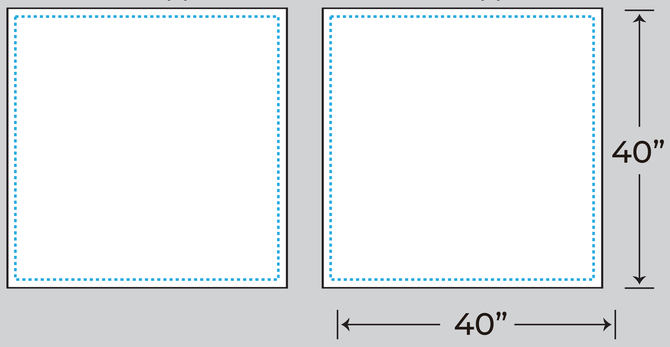

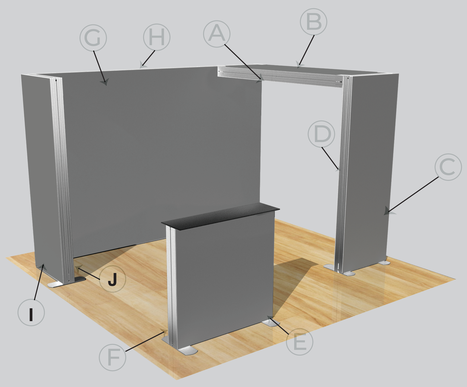

Archway Horizontal Section

Inside/Bottom (A) | Outside/Top (B)

Archway Vertical Section

Outside/Front (C) | Inside/Back (D)

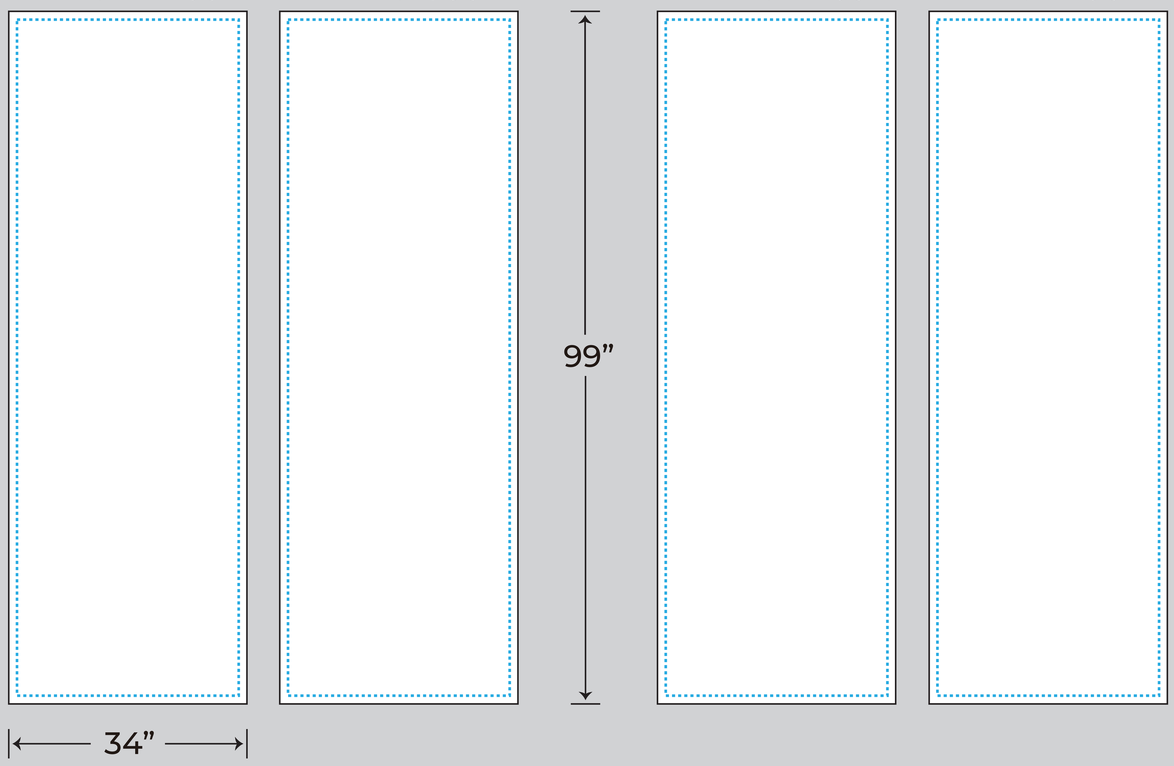

Side Wall

Outside/Front (I) | Inside/Back (J)

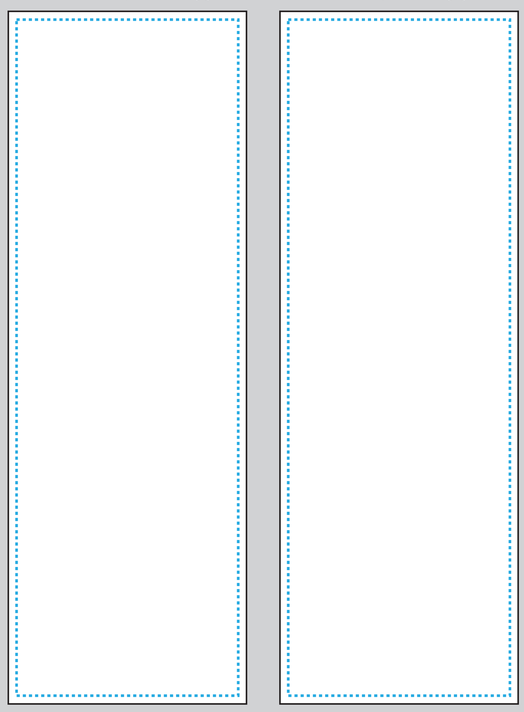

SEG Backwall

Front (G) | Back (H)

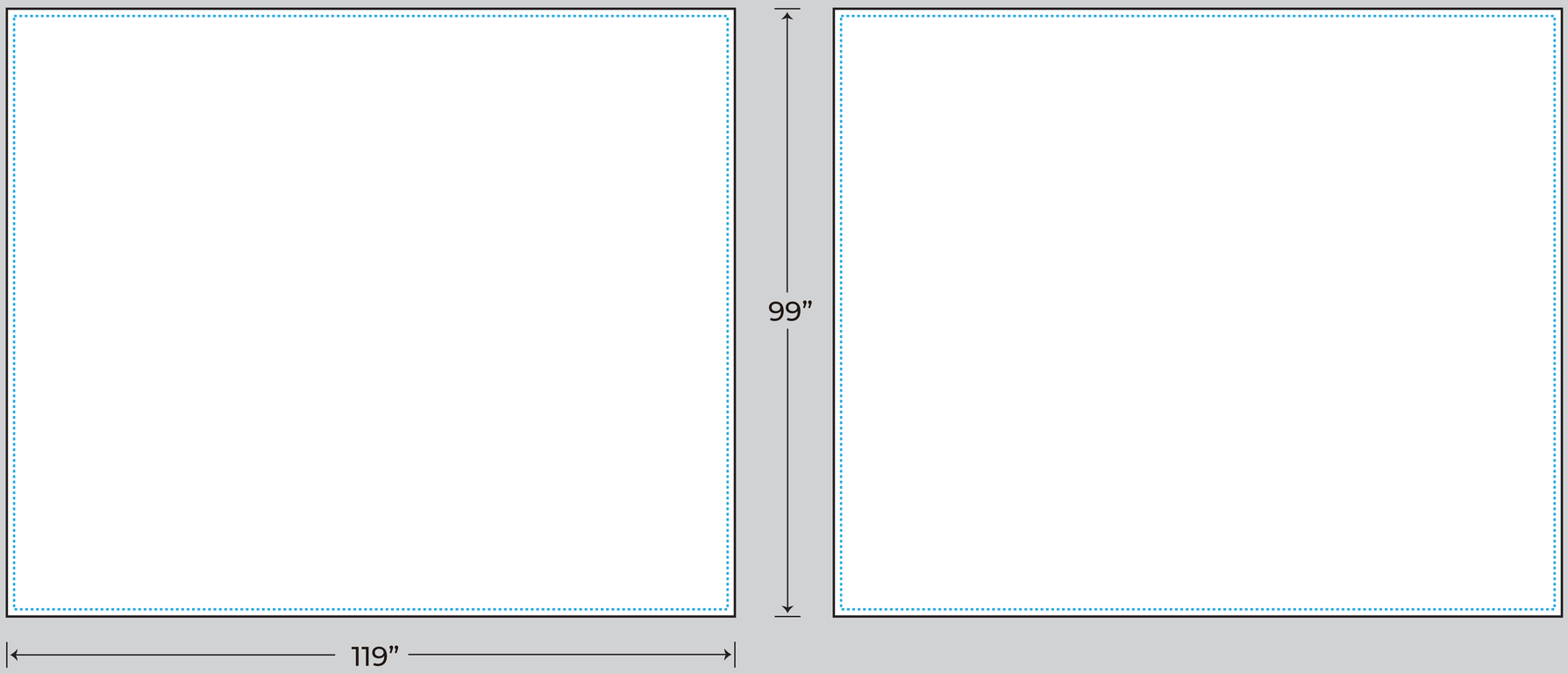

--- SAFE ZONE: All critical elements (text, images, logos etc.) must be kept inside the blue line.

IMPORTANT

Please send artwork in CMYK color mode & note any PMS colors being used. This Template is designed at 10% scale of the final product. Please RASTERIZE artwork at a minimum of 300DPI to endure high quality print

LookOurWay.com | 866-586-3888 | sales@lookourway.com